# Homework for O-II (Physics)

**1.** Test yourself 1.1, 1.2, 1.3 and 1.4.

**2.** Map seven base physical quantities.

**3.** Identify the physical quantity, numerical magnitude and unit in the following statements:

**4.** The distance–time graph for a girl on a cycle ride is shown in Figure 3.5.

- **a** How far did she travel?
- **b** How long did she take?
- **c** What was her average speed in km/h?
- **d** How many stops did she make?
- **e** How long did she stop for altogether?
- **f** What was her average speed excluding stops?
- **g** How can you tell from the shape of the graph when she travelled fastest? Over which stage did this happen?

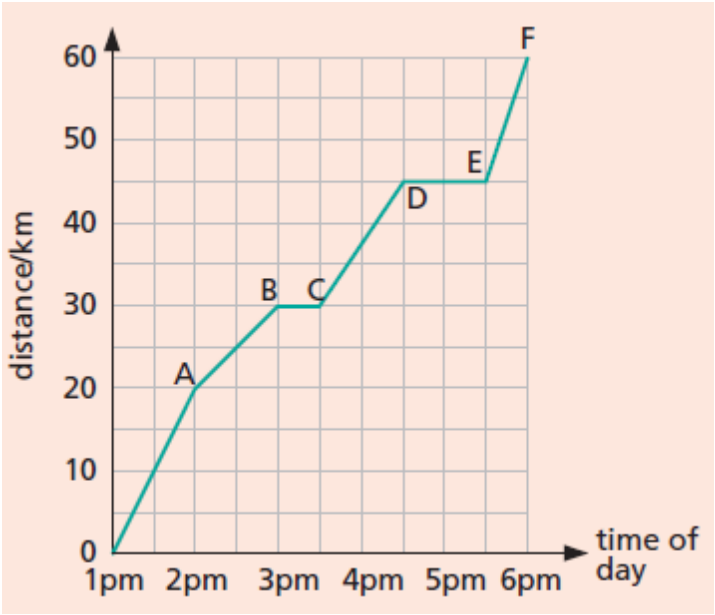


Fig 3.5

**5.** A sprint cyclist starts from rest and accelerates at 1 $m/s^2$ for 20 seconds. He then travels at a constant speed for 1 minute and finally decelerates at 2 $m/s^2$ until he stops. Find his maximum speed in km/h and the total distance covered in meters.

**6.** The graph in Figure 3.6 represents the distance travelled by a car plotted against time.

**a** How far has the car travelled at the end of 5 seconds?

**b** What is the speed of the car during the first 5 seconds?

**c** What has happened to the car after A?

**d** Draw a graph showing the speed of the car plotted against time during the first 5 seconds.

**7.** The graph in Figure 3.6 represents the distance travelled by a car plotted against time.

**a** How far has the car travelled at the end of 5 seconds?

b What is the speed of the car during the first 5 seconds?

**c** What has happened to the car after A?

**d** Draw a graph showing the speed of the car plotted against time during the first 5 seconds.

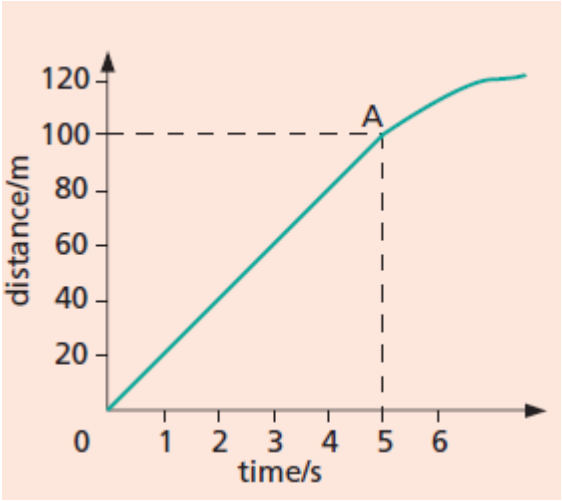


Fig 3.6

**8.** Figure 3.7 shows an incomplete velocity–time graph for a boy running a distance of 100 m.

**a** What is his acceleration during the first 4 seconds?

**b** How far does the boy travel during (i) the first 4 seconds,
(ii) The next 9 seconds?

**c** Copy and complete the graph showing clearly at what time he has
covered the distance of 100 m. Assume his speed remains constant at the
value shown by the horizontal portion of the graph.

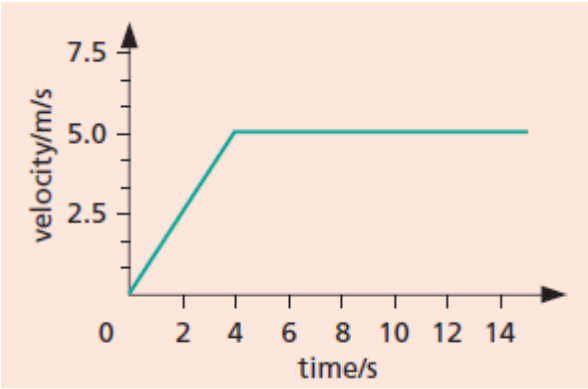


Fig 3.7

**9.** The approximate velocity–time graph for a car on a 5-hour journey is shown in Figure 3.8. (There is a very quick driver change midway to prevent driving fatigue!)

**a** State in which of the regions OA, AB, BC, CD, DE the car is (i) accelerating, (ii) decelerating, (iii) travelling with uniform velocity.

**b** Calculate the value of the acceleration, deceleration or constant velocity in each region.

**c** What is the distance travelled over each region?

**d** What is the total distance travelled?

**e** Calculate the average velocity for the whole journey.

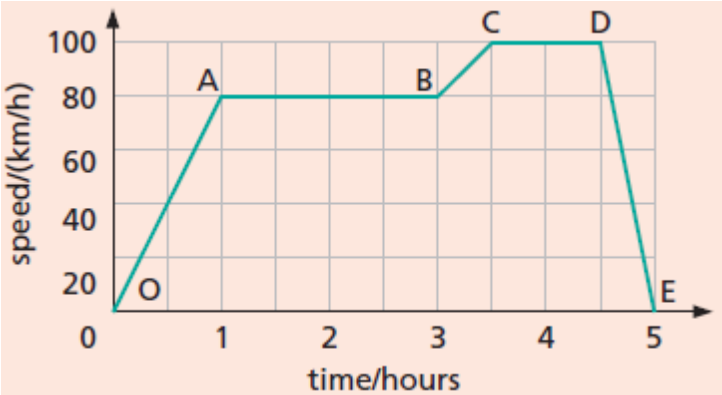


Fig 3.8

**10.** The distance–time graph for a motorcyclist riding off from rest is shown in Figure 3.9.

a Describe the motion.

b How far does the motorbike move in 30 seconds?

c Calculate the speed.

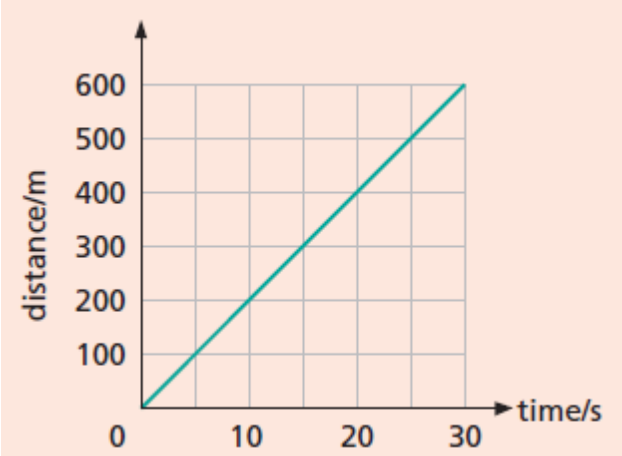


Fig 3.9

**11.** A ball is projected vertically upwards with an initial velocity of 30 m/s. Find

a its maximum height and

b the time taken to return to its starting point.

Neglect air resistance and take $g$ = 10 m/s$^2$.

**12.** A stone falls from rest from the top of a high tower. Ignore air resistance and take $g$ = 10 m/s$^2$.

**a** What is its velocity after

**(i)** 1 s,

**(ii)** 2 s,

**(iii)** 3 s,

**(iv)** 5 s?

**b** How far has it fallen after

**(i)** 1 s,

**(ii)** 2 s,

**(iii)** 3 s,

**(iv)** 5 s?

**13.** An object falls from a hovering helicopter and hits the ground at a speed of 30 m/s. How long does it take the object to reach the ground and how far does it fall? Sketch a velocity–time graph for the object (ignore air resistance).

**14.** If the density of wood is 0.5 g/cm$^3$ what is the mass of

**(i)** 1 cm$^3$,

**(ii)** 2 cm$^3$,

**(iii)** 10 cm$^3$?

**b** What is the density of a substance of

**(i)** mass 100 g and volume 10 cm$^3$,

**(ii)** volume 3 m$^3$ and mass 9 kg?

**c** The density of gold is 19 g/cm3. Find the volume of

**(i)** 38 g,

**(ii)** 95 g of gold.

**15.** A piece of steel has a volume of 12 cm$^3$ and a mass of 96 g. What is its density in

**a** g/cm$^3$,

**b** kg/m$^3$?

**16.** What is the mass of 5 m$^3$ of cement of density 3000 kg/m$^3$?

**17.** What is the mass of air in a room measuring 10 m × 5.0 m ×2.0 m if the density of air is 1.3 kg/m$^3$?

**18.** When a golf ball is lowered into a measuring cylinder of water, the water level rises by 30 cm$^3$ when the ball is completely submerged. If the ball weighs 33 g in air, find its density.

**19.** Why does ice float on water?

**20.** What is the average speed of

**a** a car that travels 400 m in 20 s,

**b** an athlete who runs 1500 m in 4 minutes?

**21.** A train increases its speed steadily from 10 m/s to 20 m/s in 1 minute.

**a** What is its average speed during this time, in m/s?

**b** How far does it travel while increasing its speed?

**22.** A motorcyclist starts from rest and reaches a speed of 6 m/s after travelling with uniform acceleration for 3 s. What is his acceleration?

**23.** An aircraft travelling at 600 km/h accelerates steadily at 10 km/h per second. Taking the speed of sound as 1100 km/h at the aircraft's altitude, how long will it take to reach the 'sound barrier'?

**24.** A vehicle moving with a uniform acceleration of 2 $m/s^2$ has a velocity of 4 m/s at a certain time. What will its velocity be?

**a** 1 s later,

**b** 5 s later?

**25.** If a bus travelling at 20 m/s is subject to a steady deceleration of 5m/s2, how long will it take to come to rest?

**26.** The tape in Figure 2.7 was pulled through a timer by a trolley travelling down a runway. It was marked off in ten tick lengths.

**a** What can you say about the trolley's motion?

**b** Find its acceleration in $cm/s^2$.

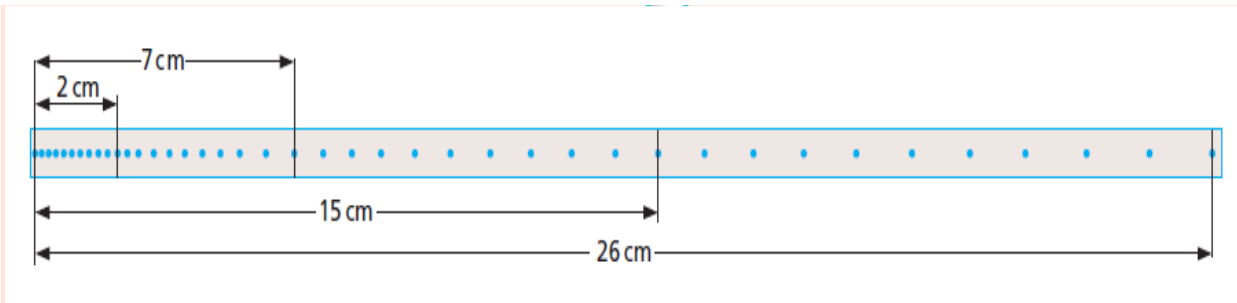


Fig 2.7

**27.** Taking the density of copper as 9 g/cm$^3$, find

**a** the mass of 5 cm3 and

**b** the volume of 63 g.

**28.** Find the resultant of two forces of 4.0 N and 5.0 N acting at an angle of 45$^o$ to each other.

**29.** A block of mass 2 kg has a constant velocity when it is pushed along a table by a force of 5 N. When the push is increased to 9 N what is

**a** the resultant force,

**b** the acceleration?

**30.** Which one of the diagrams in Figure 8.7 shows the arrangement of forces that gives the block of mass *M* the greatest acceleration?

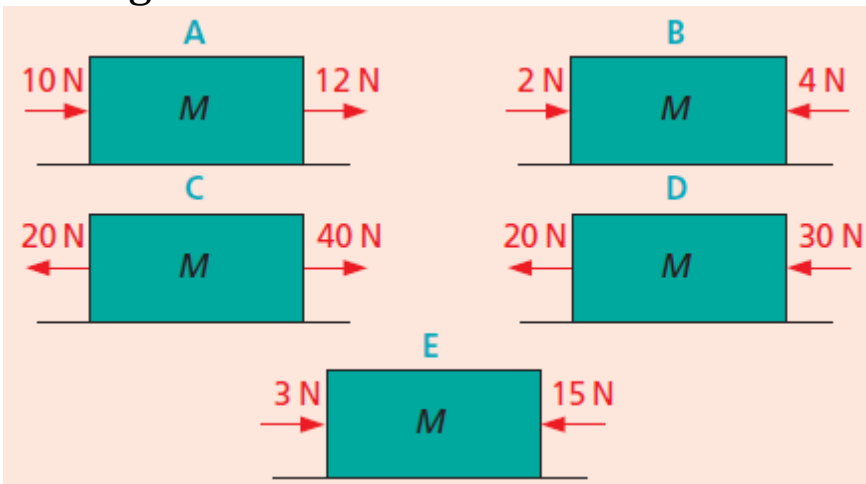


Fig 8.7

**31.** In Figure 8.8 if *P* is a force of 20 N and the object moves with constant velocity, what is the value of the opposing force *F?* object

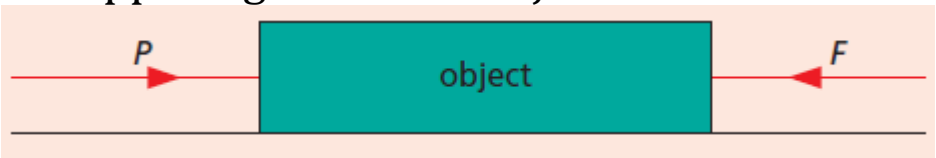


Figure 8.8

**32.** **a** What resultant force produces an acceleration of 5 m/s2 in a car of mass 1000 kg?
**b** What acceleration is produced in a mass of 2 kg by a resultant force of 30 N?

**33.** A block of mass 500 g is pulled from rest on a horizontal frictionless bench by a steady force *F* and travels 8 m in 2 s. Find

**a** the acceleration,

**b** the value of *F*.

**34.** Starting from rest on a level road a girl can reach a speed of 5 m/s in 10 s on her bicycle. Find

**a** the acceleration,

**b** the average speed during the 10 s,

**c** the distance she travels in 10 s.

Eventually, even though she is still pedaling as fast as she can, she stops accelerating and her speed reaches a maximum value. Explain in terms of the forces acting why this happens.

**35.** What does an astronaut of mass 100 kg weigh

**a** on Earth where the gravitational field strength is 10 N/kg,

**b** on the Moon where the gravitational field strength is 1.6 N/kg?

**36.** A rocket has a mass of 500 kg.

**a** What is its weight on Earth where $g$ = 10 N/kg?

**b** At lift-off the rocket engine exerts an upward force of 25 000 N. What is the resultant force on the rocket? What is its initial acceleration?

**37.** Figure 8.9 shows the forces acting on a raindrop which is falling to the ground.

**a** **(i)** *A* is the force which causes the raindrop to fall. What is this force called?

**(ii)** *B* is the total force opposing the motion of the drop. State *one* possible cause of this force.

**b** What happens to the drop when force *A* = force *B*?

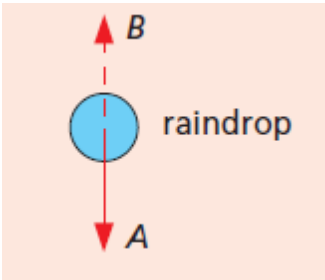


Figure 8.9

**38.** Explain the following using $F = ma$.

**a** A racing car has a powerful engine and is made of strong but lightweight material.

**b** A car with a small engine can still accelerate rapidly.

**39.** The see-saw in Figure 10.3 balances when Shani of weight 320 N is at A, Tom of weight 540 N is at B and Harry of weight *W* is at C. Find W.

**40.** Figure 10.8 shows three positions of the pedal on a bicycle which has a crank 0.20 m long. If the cyclist exerts the same vertically downward push of 25 N

with his foot, in which case, A, B or C, is the turning effect

**(i)** 25 × 0.2 = 5 N m,

**(ii)** 0,

**(iii)** between 0 and 5 N m?

Explain your answers.

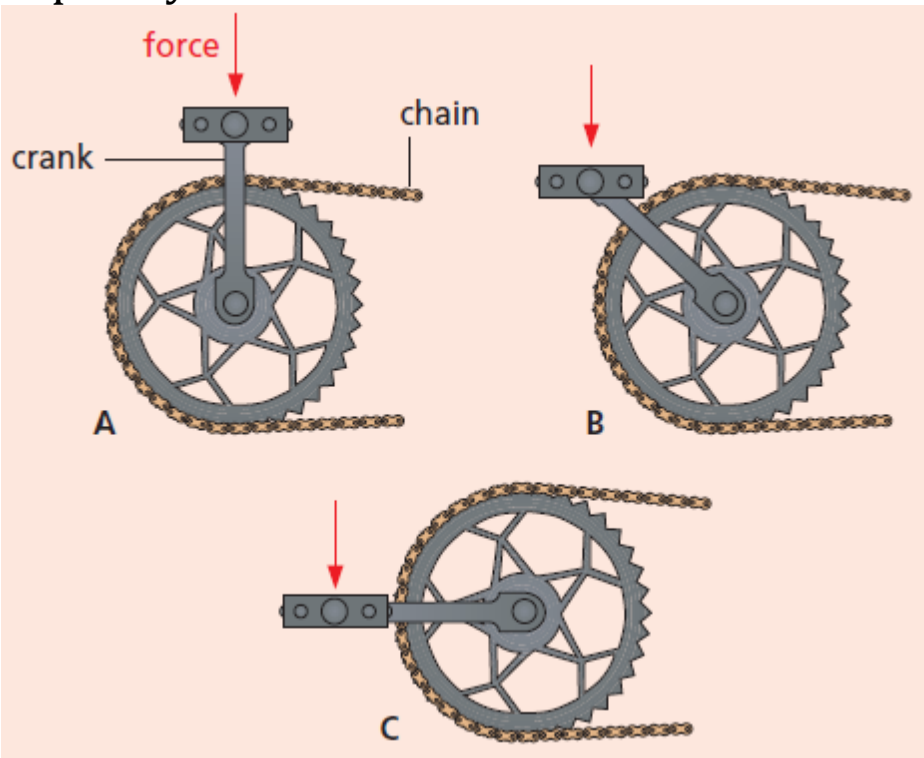


**Figure 10.8**

**41.** The weight of the uniform bar in Figure 11.11 is 10 N. Does it balance, tip to the right or tip to the left?

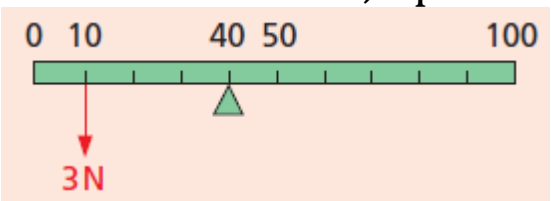


Figure 11.11

**42.** What is the momentum in kg m/s of a 10 kg truck travelling at

**a** 5 m/s,

**b** 20 cm/s,

**c** 36 km/h?

**43.** A ball X of mass 1 kg travelling at 2 m/s has a head-on collision with an identical ball Y at rest. X stops and Y moves off. What is Y's velocity?

**44.** A boy with mass 50 kg running at 5 m/s jumps on to a 20 kg trolley travelling in the same direction at 1.5 m/s. What is their common velocity?

**45.** A girl of mass 50 kg jumps out of a rowing boat of mass 300 kg on to the bank, with a horizontal velocity of 3 m/s. With what velocity does the boat begin to move backwards?

**46.** A truck of mass 500 kg moving at 4 m/s collides with another truck of mass 1500 kg moving in the same direction at 2 m/s. What is their common velocity just after
the collision if they move off together?

**47.** The velocity of a body of mass 10 kg increases from 4 m/s to 8 m/s when a force acts on it for 2 s.

**a** What is the momentum before the force acts?

**b** What is the momentum after the force acts?

**c** What is the momentum gain per second?

**d** What is the value of the force?

**48.** A rocket of mass 10 000 kg uses 5.0 kg of fuel and oxygen to produce exhaust gases ejected at 5000 m/s. Calculate the increase in its velocity.

**49.** Name the energy transfers which occur when

**a** an electric bell rings,
**b** someone speaks into a microphone,
**c** a ball is thrown upwards,
**d** there is a picture on a television screen,
**e** a torch is on.

**50.** Name the forms of energy represented by the letters A, B, C and D in the following statement.
In a coal-fi red power station, the (A) energy of coal becomes (B) energy which changes water into steam. The steam drives a turbine which drives a generator. A generator transfers (C) energy into (D) energy.

**51.** How much work is done when a mass of 3 kg (weighing 30 N) is lifted vertically through 6 m?

**52.** A hiker climbs a hill 300 m high. If she has a mass of 50 kg calculate the work she does in lifting her body to the top of the hill.

**53.** In loading a lorry a man lifts boxes each of weight 100 N through a height of 1.5 m.
**a** How much work does he do in lifting one box?
**b** How much energy is transferred when one box is lifted?
**c** If he lifts four boxes per minute at what power is he working?

**54.** A boy whose weight is 600 N runs up a flight of stairs 10 m high in 12 s. What is his average power?

**55.** **a** When the energy input to a gas-fi red power station is 1000 MJ, the electrical energy output is 300 MJ. What is the efficiency of the power

station in changing the energy in gas into electrical energy?

**b** What form does the 700 MJ of 'lost' energy take?

**c** What is the fate of the 'lost' energy?

**56.** State what energy transfers occur in

**a** a hairdryer,

**b** a refrigerator,

**c** an audio system.

**57.** An escalator carries 60 people of average mass 70 kg to a height of 5 m in one minute. Find the power needed to do this.

Noor Ghulam (AP)
Physics Deptt.
Contact# 03325568631
e-mail. lightslave@gmail.com